FLOW DIVIDER VALVE ·FDCT-**-** TYPE	Thread connecting	20.6 MPa

・Dimensions (FDCT-04)

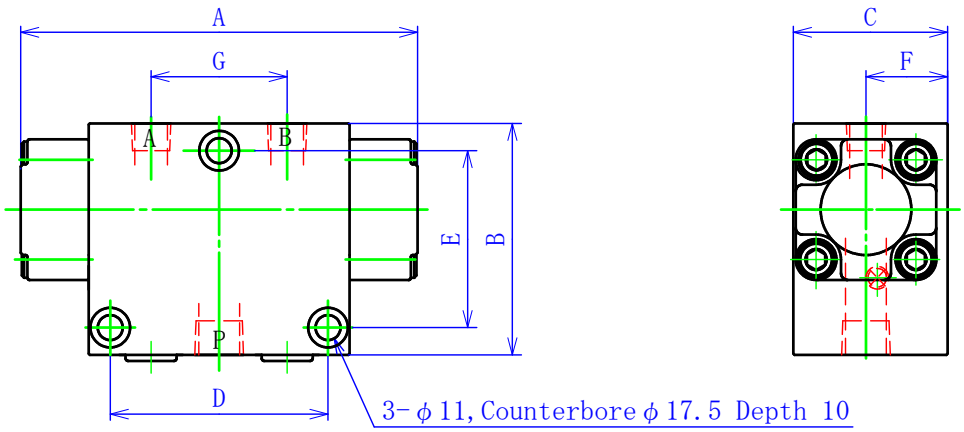

・Dimensions (FDCT-08·10)

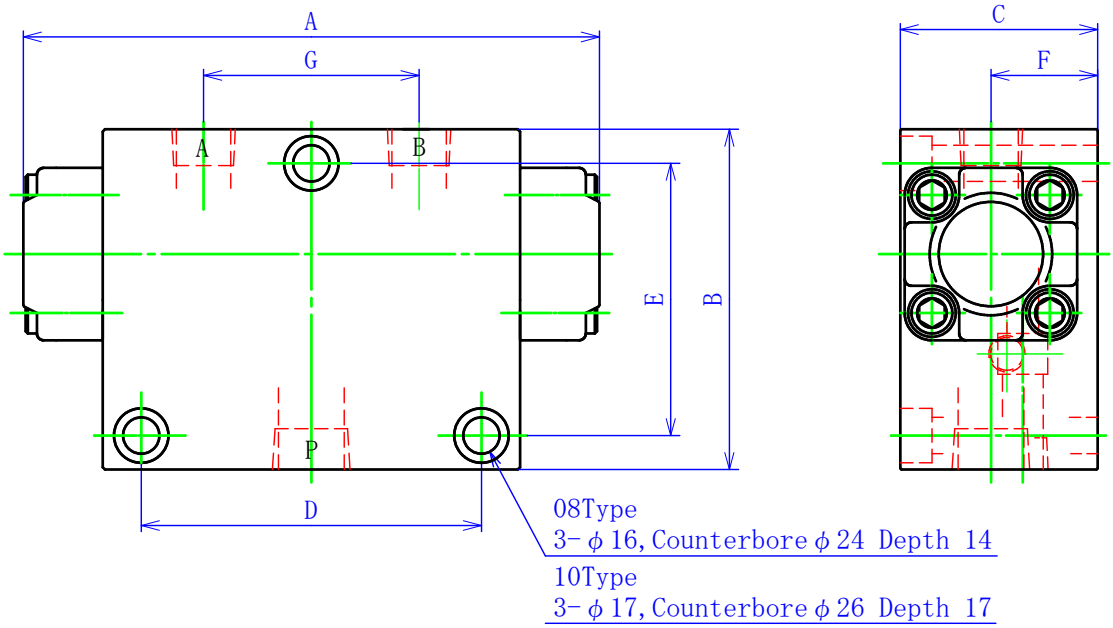

・Specification

Type			Port P Standard flow (l/min.)	Port P Flow range (l/min.)	Pressure loss (MPa)	Conncting pipe P	Conncting pipe A・B	A	B	C	D	E	F	G	Weight (kg)
FDCT	04	4	4	3 ～ 5	±0.3 0.7	1/2″	3/8″	175	102	68	96	78	36	60	6.5
		6	6	4 ～ 8											
		10	10	7 ～ 13											
		15	15	10 ～ 18											
		20	20	15 ～ 27											
		30	30	22 ～ 35											
		40	40	30 ～ 47											
	08	60	60	45 ～ 75		1″	3/4″	254	150	87	150	120	47	95	17.5
		90	90	65 ～ 110											
	10	140	140	100 ～ 160		1 1/4″	1″	302	180	117	180	144	62	106	34
		200	200	150 ～ 220											